REV.	NOTES	DATE
A	RELEASED	2005/09/19

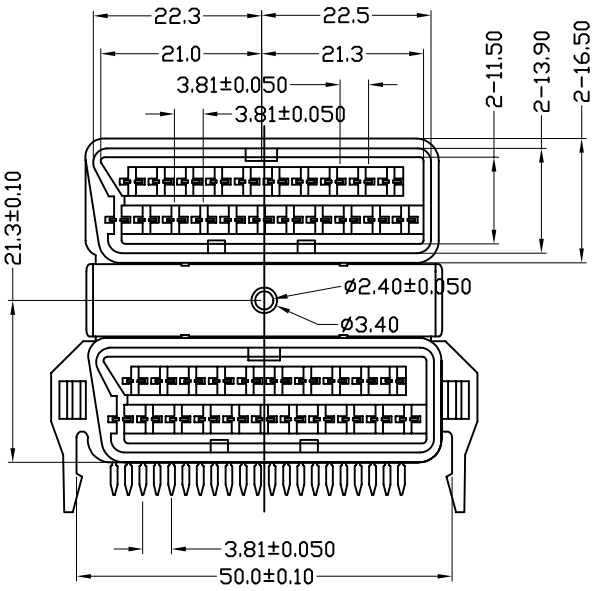

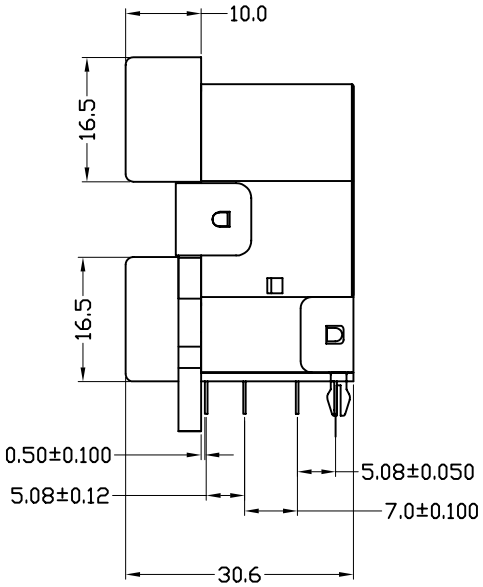

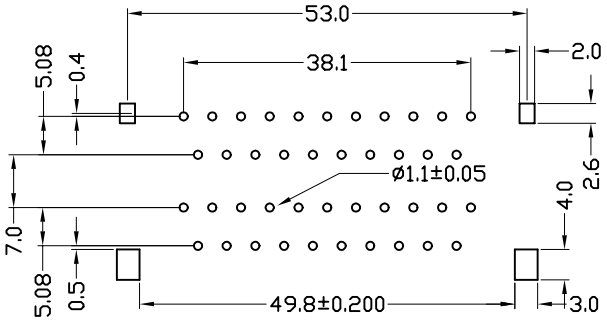

PCB LAYOUT

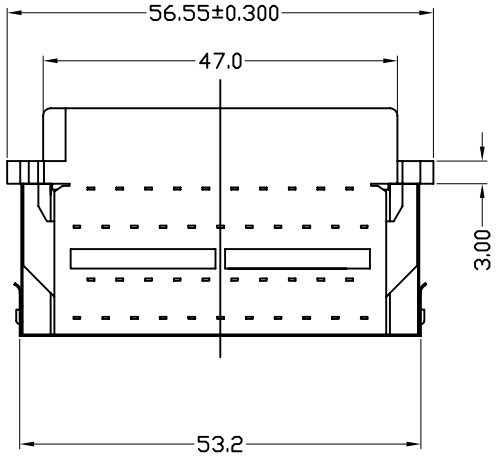

NOTES:

1.MATERIAL

1.1 Insulator:PC Or ABS

1.2 Contact:Brass

1.3 Contact Plated:Tin Plated

2.SPECIFICATION

2.1 Current Rate:1 Amps

2.2 Insulator Resistance:5000M Ohms Min. at 500V DC

2.3 Dielectric Strength:1000V Per minute

2.4 Operation Temperature:-55℃ to+105℃

單位(UNITS)	mm	
數量(QT'Y)	N/A	
材料(MT'L)	SEE NOTE	
處理(FINISH)	SEE NOTE	圖名(NAME) 90度雙層母座C型連體式 PC 無麥 有刺破
繪圖(DRAW)		
設計(DE'N)		料號(PART NUMBER): ASC+050L-4CC2
審校(CH'K)		圖號(DRAW NUMBER): RASC050L4CC2
		圖檔(FILE NAME .DWG): D:\ZSB\CPT
核准(APP'D)		比例(SCALE) 1/1 · 圖紙(SIZE) A4 · 頁次(SHEET) 1 · 版次(REV.) A

DIMENSIONS TOLERANCE

METRIC

.0= ±.30
.00= ±.20
.000= ±.XXX
.0000=.±
ANG.= ±2°