REV	MODIFICATION	DATE	DRAW	APPROVE
A	NEW DWG	2007.08.05	HUANG	KEVIN

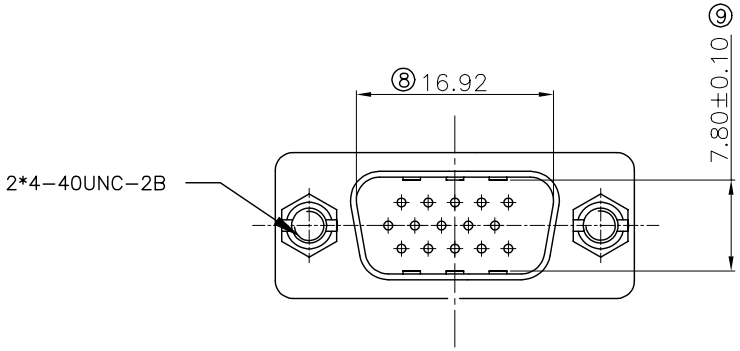

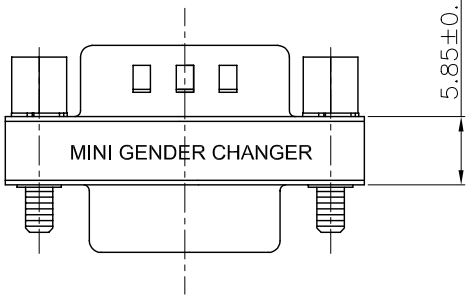

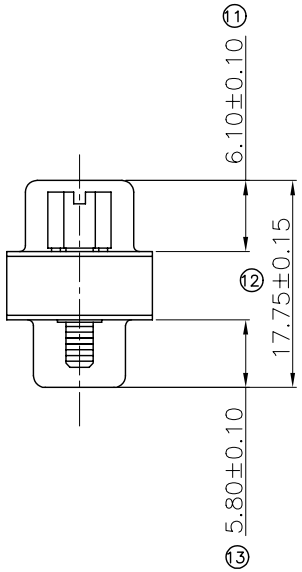

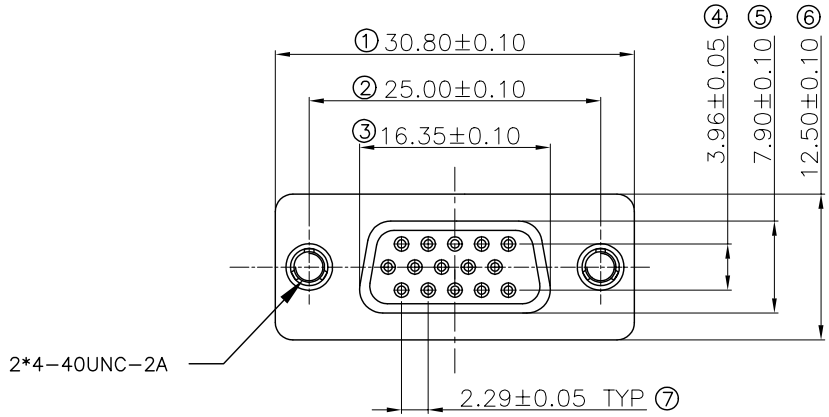

NOTES
MARK ⓧ IS MAJOR TEST DIMENSION
1: MATERIAL:
HOUSING: P BT+30%G.F, BLOVE, UL94V-0
CONTACT: BRASS
2: FINISH:
CONTACT PLATING: GOLD PLATED
3: SPECIFICATION:
CURRENT RATING: 5A
WITHSTANDING VOLTAGE: AC 1000V 5s
INSULATION RESISTANCE: 1000M Ω 500V DC
OPERATING TEMPERATURE: -55°C~105 °C

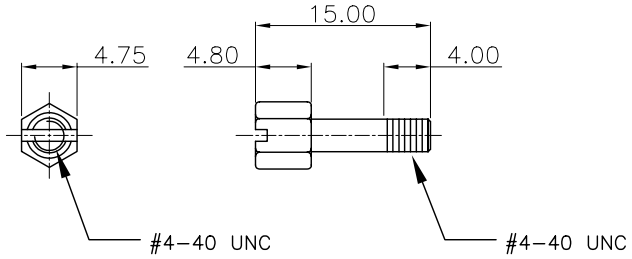

Screw specification

-TOLERANCES- UNLESS OTHERWISE SPECIFIED 公差参考表			TITLE: 產品名稱： HDB 0.76 M/F转接头				
X.X ±0.25	X.X° ±3°	APPD: 核准： KEVIN	PRODUCT NO: 產品編號： 183-XXXZBXPB01				
X.XX ±0.15	X.XX° ±1°	CHECK: 校對： TENA	DATE	SCALE	UNIT	TYPE	PAGE
X.XXX ±0.05	X.XXX° ±0.5°	DRAW: 繪圖： HUANG	2007.08.05	FREE	MM	H	1/1