REV	MODIFICATION	DATE	DRAW	APPROVE
A	ENXXXXXXX	2007.07.05	HUANG	KEVIN

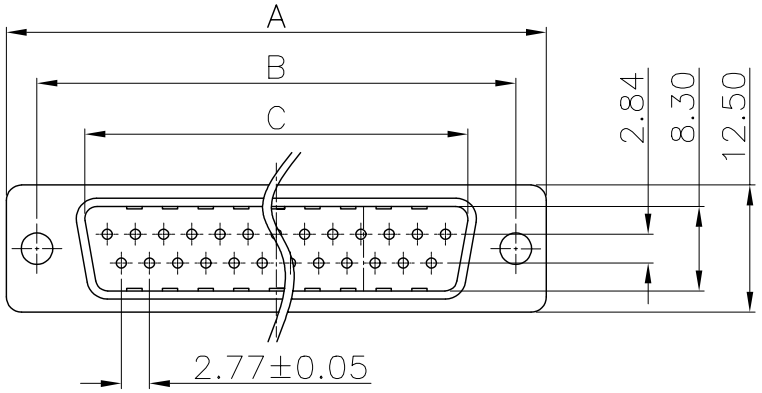

NOTES
1:MATERIAL:
SHELL: SPCC
HOUSING: PA66+10%G.F, BLACK, UL94V-0
CONTACT: BRASS
2:FINISH:
SHELL: NICKEL PLATING
CONTACT PLATING: GOLD PLATING
3:SPECIFICATION:
CURRENT RATING: 5A
WITHSTANDING VOLTAGE:1000V
INSULATION RESISTANCE: 1000MΩ
OPERATING TEMPERATURE: -55°C~105°C

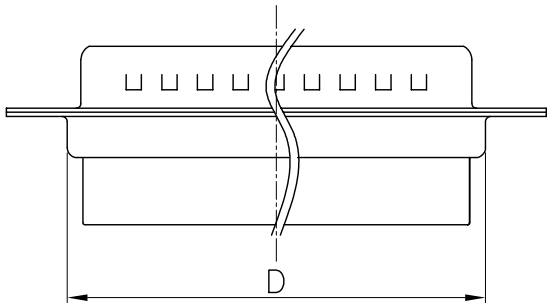

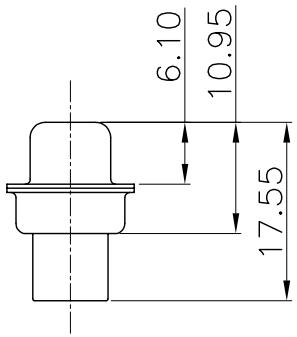

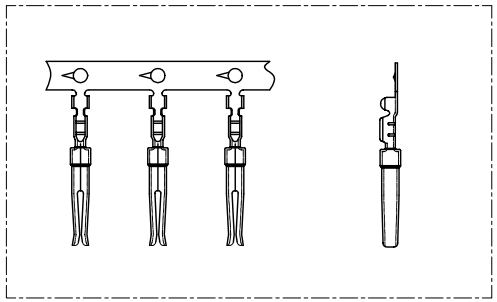

CONTACT

PIN NO.	DIM A	DIM B	DIM C	DIM D	P/N
9P	30.80	24.99	16.92	19.20	192-009MBXPK01
15P	39.20	33.30	25.25	27.70	192-015MBXPK01
25P	53.05	47.04	38.96	41.10	192-025MBXPK01
37P	69.40	63.50	55.42	57.30	192-037MBXPK01

-TOLERANCES-
UNLESS OTHERWISE SPECIFIED
公差參考表

X.X ±0.25	X.X° ±3°	APPD: 核准： KEVIN	PRODUCT NO: 產品編號： 192-XXXMBXPK01
X.XX ±0.15	X.XX° ±1°	CHECK: 校對： TENA	
X.XXX ±0.05	X.XXX° ±0.5°	DRAW: 繪圖： HUANG	

TITLE:
產品名稱：DB 1.0 MALE 打线式成品

DATE	SCALE	UNIT	TYPE	PAGE
2007.07.05	FREE	MM	H	1/2